Version dated 03.2026
www.arnold-fastening.com

ARNOLD®
BlueFastening Systems

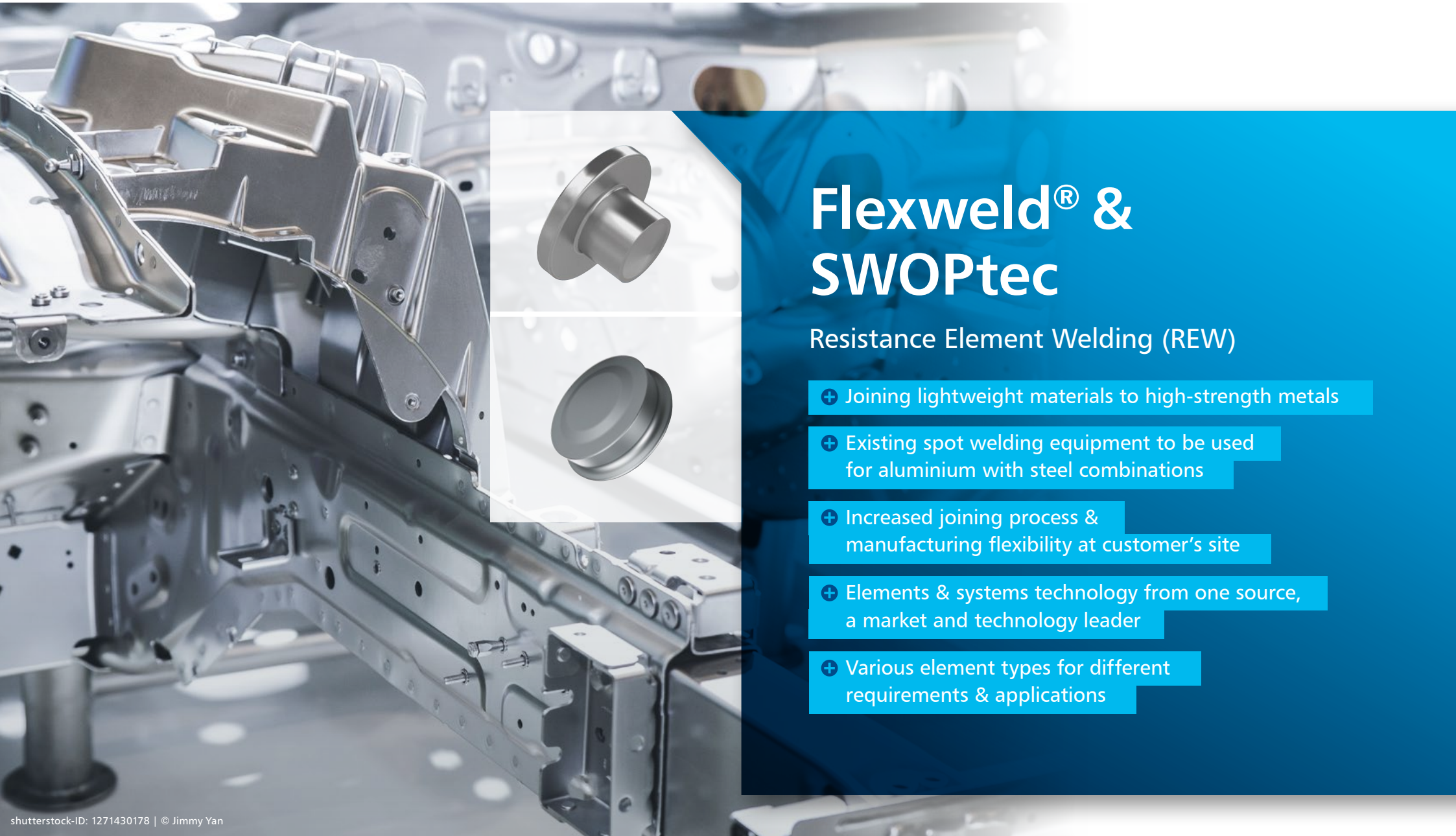

Flexweld® & SWOPtec

Resistance Element Welding (REW)

- Joining lightweight materials to high-strength metals
- Existing spot welding equipment to be used for aluminium with steel combinations
- Increased joining process & manufacturing flexibility at customer's site
- Elements & systems technology from one source, a market and technology leader
- Various element types for different requirements & applications

shutterstock-ID: 1271430178 | © Jimmy Yan

The challenge:
Joining aluminum to steel

Joining metals

Lightweight metals, such as aluminum, play an important role in weight reduction. But because of the vastly different melting points and the different heat expansion coefficients, joining aluminum to steel by welding presents a challenge. The SWOPtec and Flexweld® resistance element welding processes make it possible to join dissimilar metal combinations such as aluminum and steel.





Flexweld® - T-Shape element geometry

- Various diameter dimensions for different applications available (flanges, crash relevant area)
- Cost efficient product
- Particularly suitable for use in Al die-casted parts
- High cross-tension joint strength
- Higher material combination flexibility (e.g. 3T combinations) than self-pierce riveting

Resistance element welding

- Generates considerable weight savings, thus producing long-term reductions in CO_2 emissions
- Joins lightweight materials to high-strength steel
- Can be integrated into existing welding assembly lines, because the same welding equipment can be used for steel-steel and mixed metal applications
- Minimal training for operators
- One source for a complete system including the feeding system and processing technology for press-in
- Sufficient joint strength (also before adhesive is cured by e-paint)
- Use in Al die-casted parts
- Process flexibility - press-in at OEM with BiW robot or press shop as well as at supplier location possible

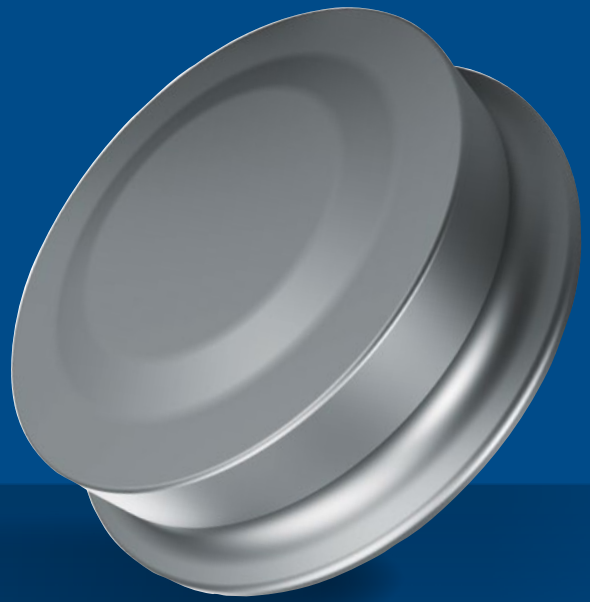

SWOPtec - Flush type element geometry

- Offers excellent joint strength, for example in crash-critical areas
- Flush to the surface, and with that no interfering contour
- Allows good offset and high tolerances for the welding electrodes

SWOPtec and Flexweld®
Areas of application

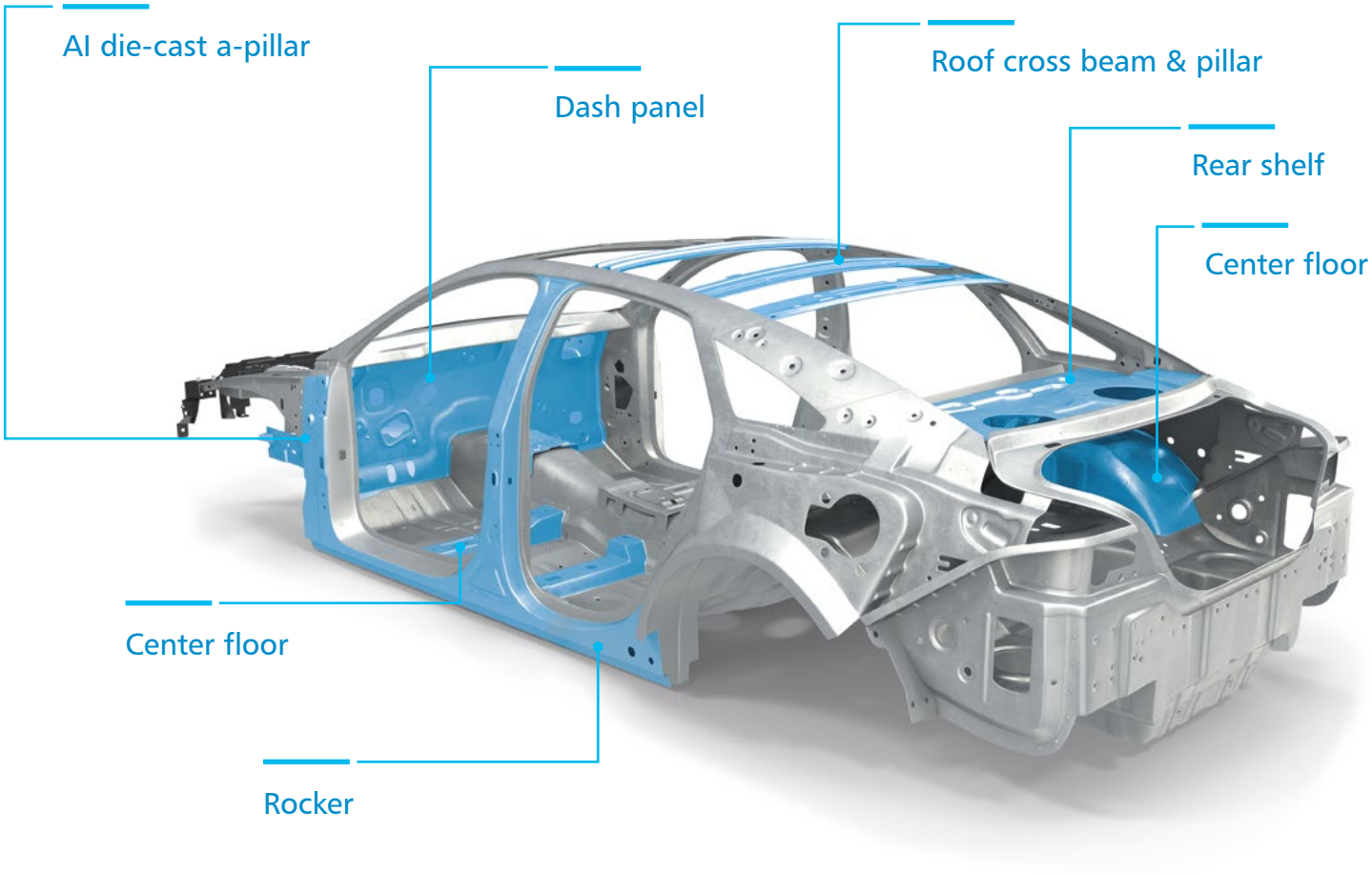

The focus of applications is in the automotive industry

The OEMs as well as their tier-1 supplier. The processes can be widely implemented and are suitable for joining any components where a steel-aluminum joint is required.

Ideal for OEMs and tier-1 suppliers

Blue marked parts either in running application or in benchmarking/qualification phase

SWOPtec and Flexweld®
Technical advantages

Resistance element welding

Benefits

Process flexibility

- Conventional system technology can be used to join aluminum and steel and is also used for resistance spot welding.
- There is no need for pilot holes or localized softening.
- The piercing step can be integrated into the forming line in the press shop where the component is formed, or in a separate step, for example at the body-in-white stage.

Design flexibility

- Compared with cold-joining processes the resistance element welding offers greater flexibility in the joining direction.
- Aluminum can be joined to ultra-high strength steels (UHSS) with strengths of over 1000 MPa.
- Application in all types of aluminum (sheet, extrusion, cast)
- Joining of 3T material combinations (e.g. 2x Al with 1x steel / 1x Al with 2x steel)

Application example

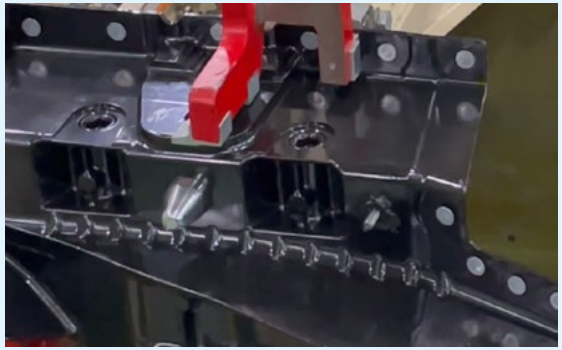

SWOPtec joining of (e-coated) aluminum die-casted part

Joining through resistance element welding
I. Pre-assembly of the element in an aluminum part

Producing the sub-assembly
Preparing the aluminum joints

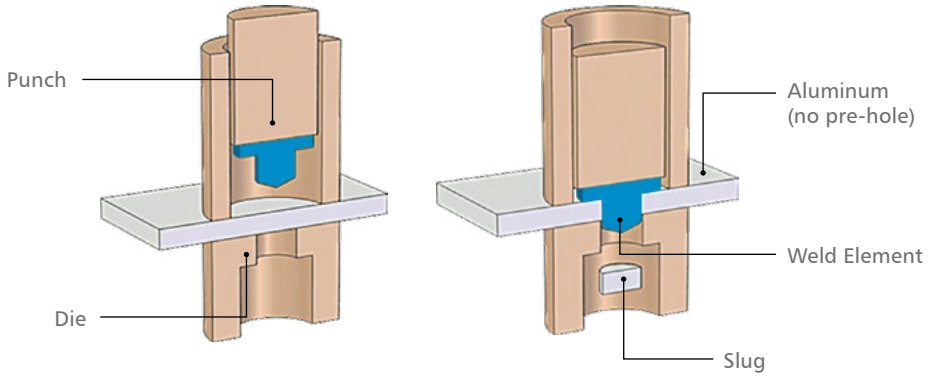

Flexweld® (T-shape)

The Flexweld(r) element is pressed-in into the non pre-holed aluminum part. Here the element is locked by partly shaft deformation with a patented punch-die design. This prevents the element from falling out as the parts are moved on to the welding line.



Interlock by element deformation

SWOPtec (flush)

The SWOPtec element is pressed-in into the non pre-holed aluminum part. Here the element is locked by filling the element shaft groove with aluminum. This prevents the element from falling out as the parts are moved on to the welding line.

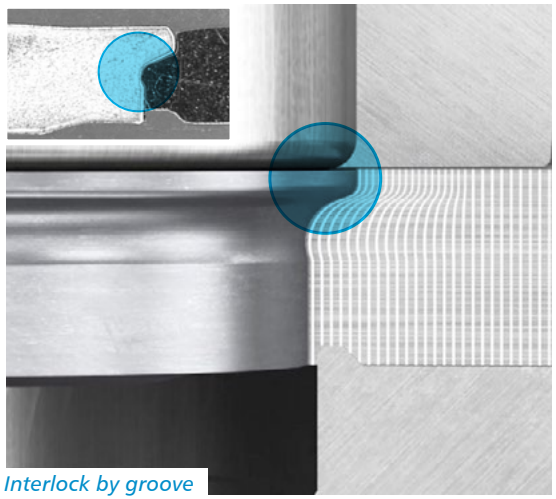

Interlock by groove

Joining by resistance element welding
II. Welding on main assembly line

Producing the body-in-white
Adhesive bonding and resistance welding

The pre-assembled aluminum part is then welded to the steel components, using conventional resistance spot welding guns generating a sub-assembly or attaching the aluminum component to the whole body-in-white.

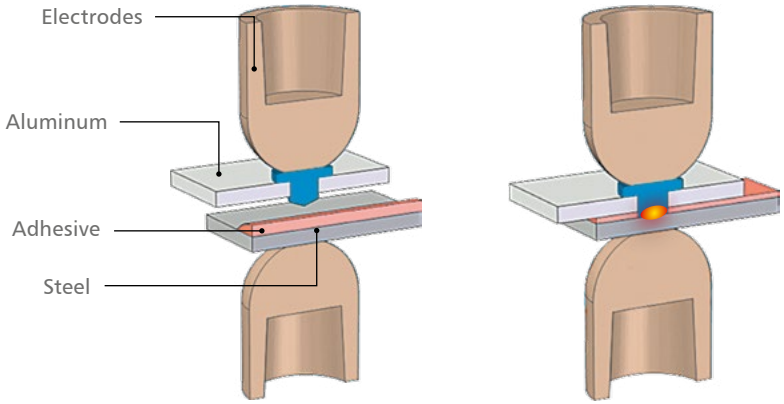

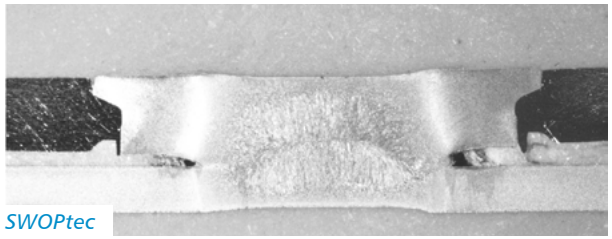
SWOPtec

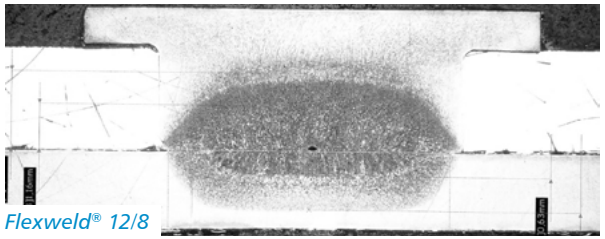
Flexweld® 12/8

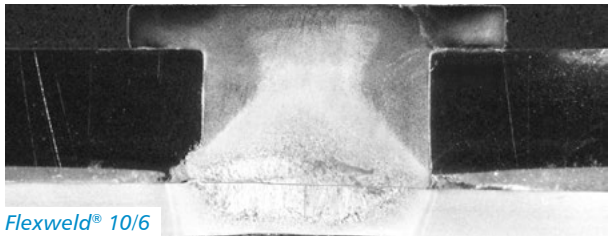
Flexweld® 10/6

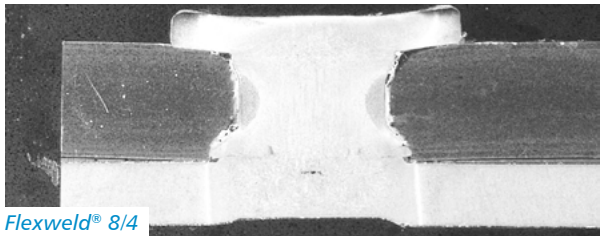
Flexweld® 8/4

Material combination flexibility

During resistance spot welding a weld nugget is formed between the element welding tip and the steel layer. The maximum size of the welding nugget depends on the element type and welding parameter.

Application thickness range Flexweld® (T-shape)

Aluminum thickness t [mm]	Type 8/4	Type 10/6	Type 12/8
0,7 - 1,0	L1,4	-	-
1,1 - 1,5	L1,9	-	-
1,6 - 2,0	L2,5	-	-
2,1 - 2,5	L2,9	-	-
2,6 - 3,1	L3,5	-	-
3,2 - 3,7	L4,1	-	-
3,8 - 4,3	L4,7	-	-
0,9 - 1,2	-	L1,5	-
1,3 - 1,6	-	L1,8	-
1,7 - 2,0	-	L2,2	-
2,1 - 2,4	-	L2,6	L2,6
2,5 - 2,8	-	L3,1	L3,0
2,9 - 3,2	-	L3,5	L3,4
3,3 - 3,6	-	L3,8	L3,8
3,7 - 4,0	-	L4,3	L4,2
4,1 - 4,4	-	L4,7	L4,6

Technical data

Head Ø	12mm/ 10mm/ 8mm
Shaft Ø	8mm/ 6mm/ 4mm
Shaft Length „L“	1,4 mm – 4,7 mm
Material Strength	Non Heat-Treated
Surface	Zinc (+thick passivation); Zinc-Nickel
Weight	0,57 g – 2,74 g

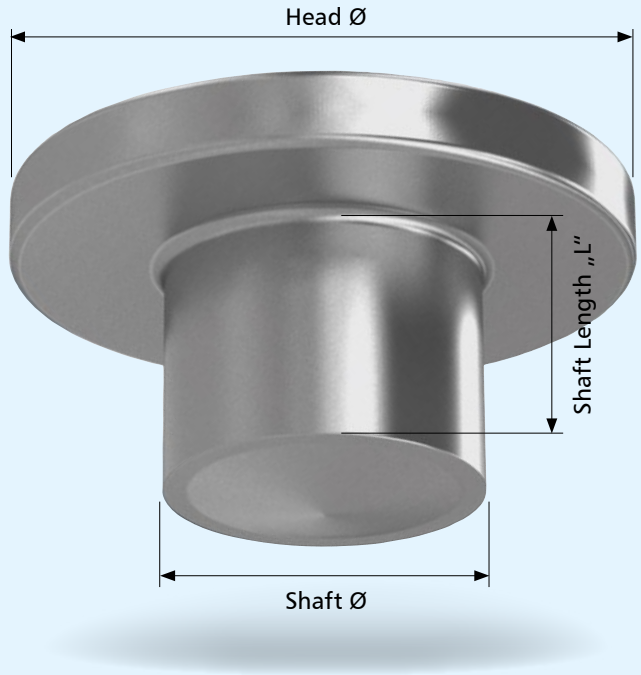

Application thickness range SWOPtec (flush)

Aluminum thickness t [mm]	Die without emboss ring (V1)	Die with emboss ring (V2)
1,1	L1,5	-
1,2 - 1,3	L1,7	-
1,4 - 1,5	L2,0	-
1,6 - 1,8		-
1,9 - 2,1	L2,3	L2,0
2,2 - 2,4	L2,6	L2,6
2,5 - 2,7	L3,0	
2,8 - 3,0	L3,2	L3,2
3,1 - 3,3	L3,5	
3,4 - 3,6	L3,8	L3,8
3,7 - 3,9	L4,1	
4,0 - 4,2	L4,4	L4,4
4,3 - 4,5	-	

Technical data

Head Ø	12,5 mm
Shaft Ø	10,5 mm
Shaft Length „L“	1,5 mm – 4,4 mm
Material Strength	Non Heat-Treated
Surface	Zinc (+thick passivation); Zinc-Nickel
Weight	1,27 g – 2,54 g

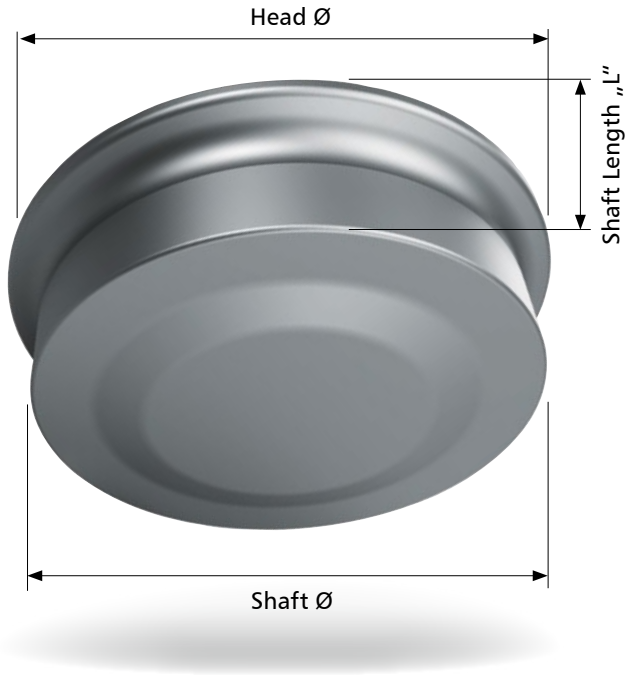

Tooling for body shop
Determination of flange size

ISO view

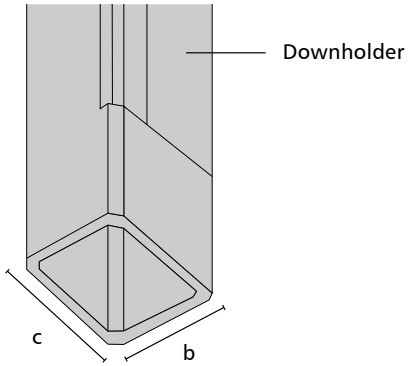

Front view

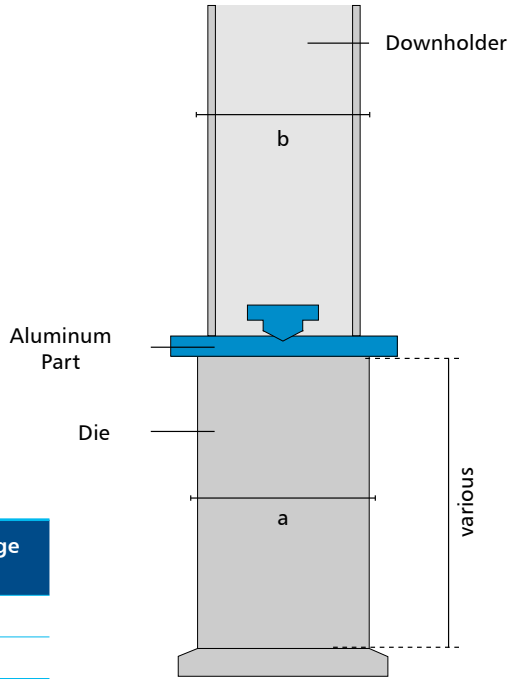

Side view

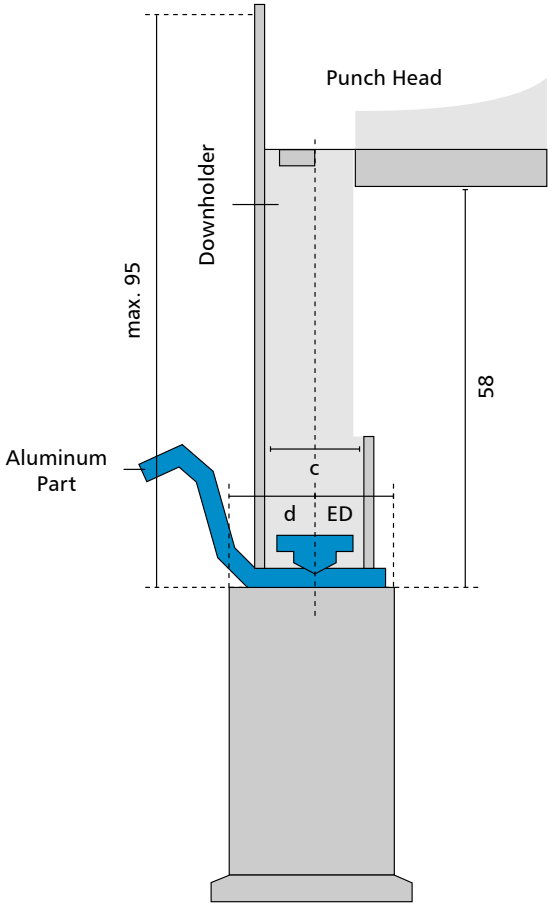

	a [mm]	b [mm]	c [mm]	d [mm]	min. ED* [mm]	min. Flange [mm]
FLXW12/8	Ø16	21,5	15,3	9,2	8	17,2
FLXW10/6	Ø16	19,5	13,3	8,2	8	16,2
FLXW8/4	Ø16	17,5	11,3	7,2	8	15,2
SWOP	Ø20	21,5	18,3	9,2	10 (Sheet) 14 (DieCast)	19,2 (Sheet) 23,2 (DieCast)

**ED=Edge Distance (element center to sheet edge);*
Depends on Al material properties and needs to be evaluated with customers original material

The system technology for press-in of Flexweld® and SWOPtec

Pedestal C-Frame

With a pedestal C-frame a robot is handling the aluminum part. Simple installation and the cost effective operation are the advantages of this layout.

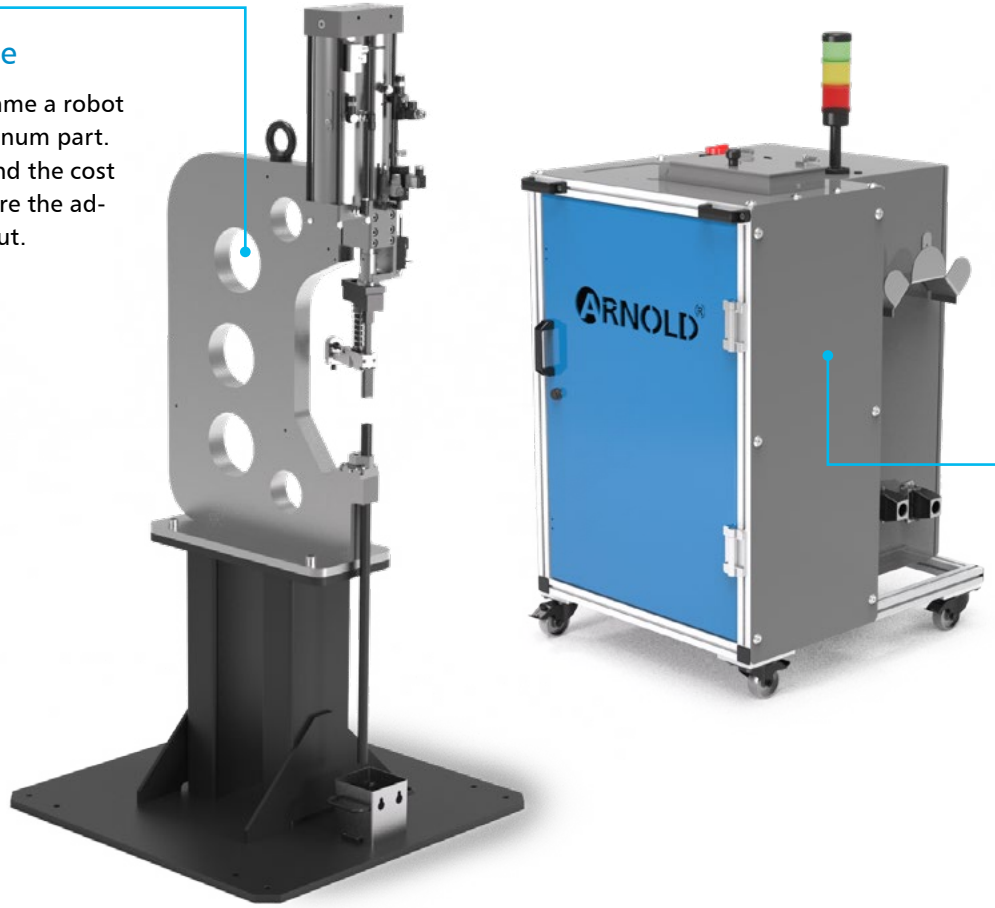

Control and software

Different possibilities of system control and data exchange exist varying from external controller setup (e.g. Siemens, Mitsubishi) to softwarebased solutions (e.g. codesys). The process data backup includes MQTT, REST, OPC UA, SQLite. Web-based HTML HMI user interface can be installed on a panel, PC/ laptop or main computer.

Ready-to-fit control cabinet & feeder

This unit includes element sorting and feeding along with the control cabinet for communication between the system and the robot. Various interfaces and functionalities can be selected for data exchange. The entire system can be integrated into a machine, a production line or company network.

The system technology for press-in of Flexweld® and SWOPtec

Robot mounted C-frame

The C-frame to press-in the element is available in different designs and functionalities such as magazine feeding or automatic tool changer. The system is independent of the robot orientation and operates at any angle. The high flexibility and accessibility are the advantages of this layout.

Low unit weight of 135 kg

Servo drive with 50 kN

Press-in time <2sec

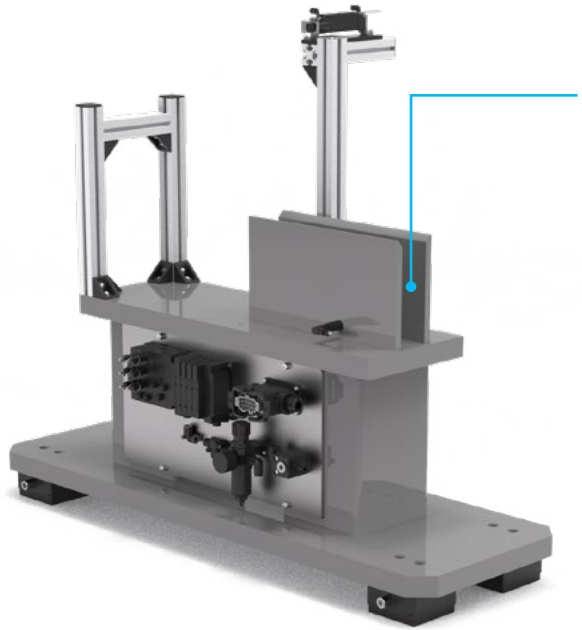

Docking and storage

This optional unit provides the storage for the C-frame in case the same robot is used for other operations such as welding. It can be designed to customers specific robot cell layout requirement and additionally equipped with a magazine refill functionality.

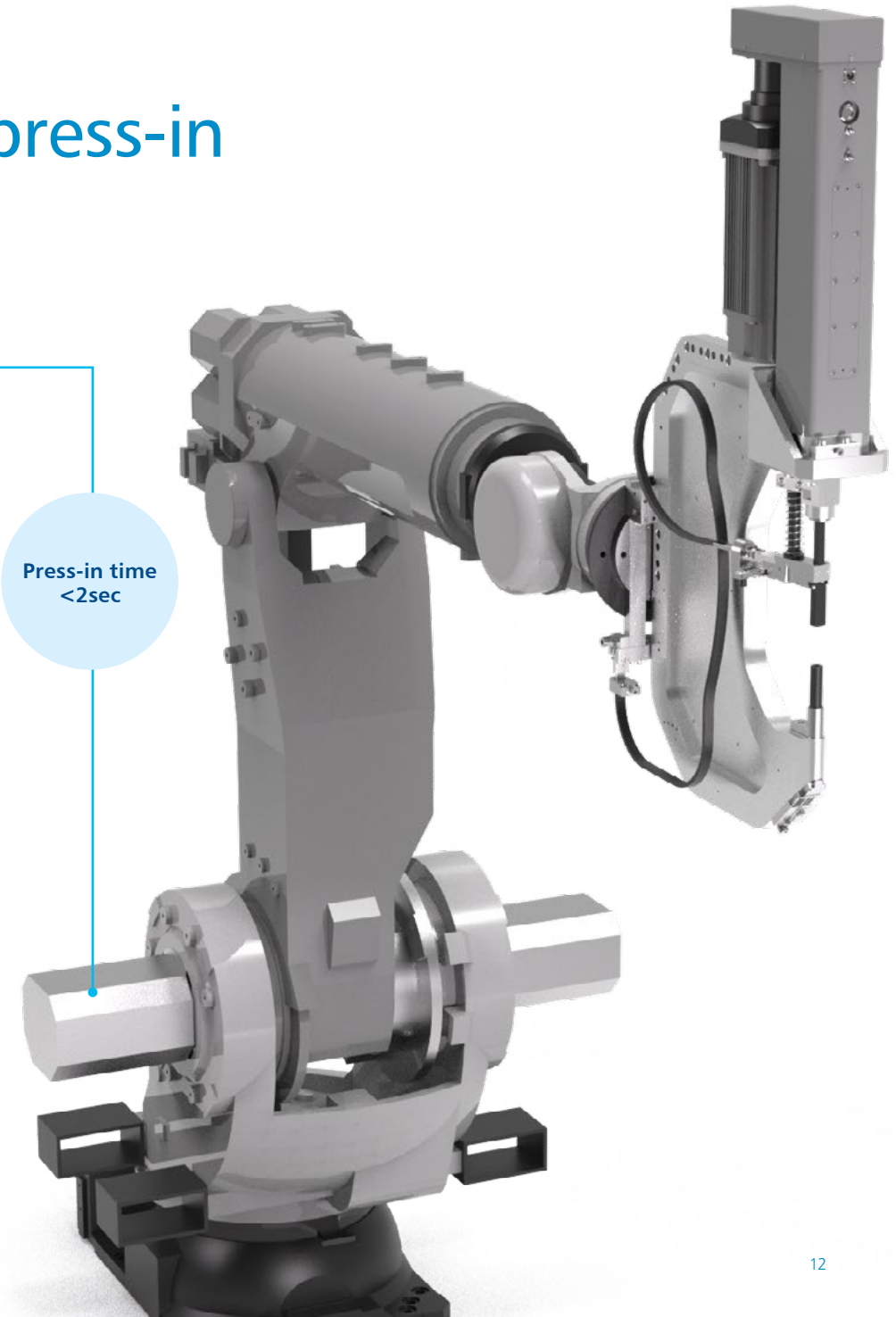

C-Frame
Measurements

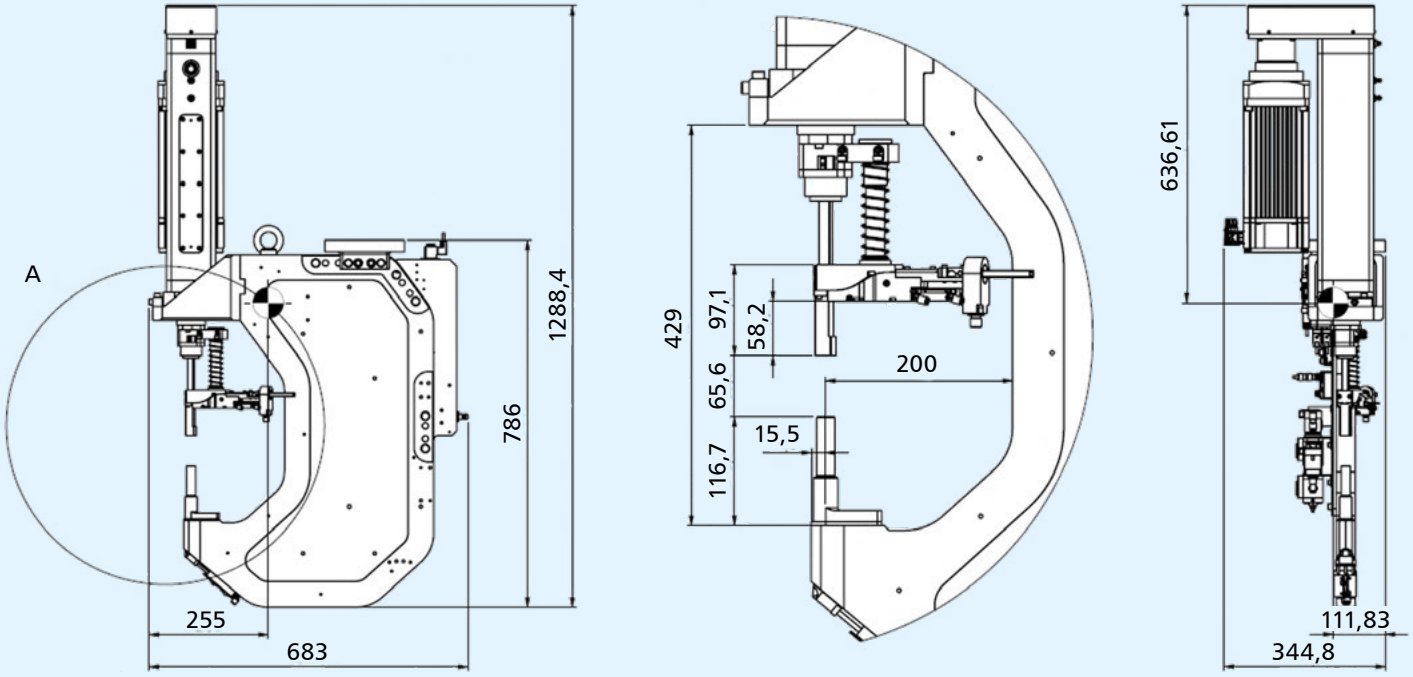

C-Frame size

The design takes into account the interfering contour and total weight as well as accessibility to the joining spot. The servo drive and the robot adapter can be aligned in various directions and positions suiting customer requirements. The die length is adaptable to the aluminum part dimension.

Examplaric dimensions C-frame

Boosting Efficiency with MultiFeed systems

Progressive In-Die

The punch head and die are installed into a progressive die-tooling and the fasteners are pressed-in simultaneously during forming and stamping of the aluminum part. Through multiplication cycle times and cost can be reduced. To achieve this, a MultiFeed system with additional features to control the fastener movement and with a feeding capacity of up to 64 fasteners in one stroke is provided.

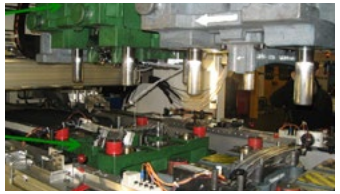

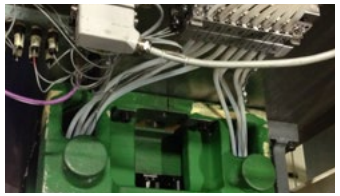



MultiFeed

Handheld device

ARNOLD provides suitable tools (punch/die) and C-frame for mounting to a standard handheld driving unit (e.g. ProSpot).



More information about the equipment available on page 15.

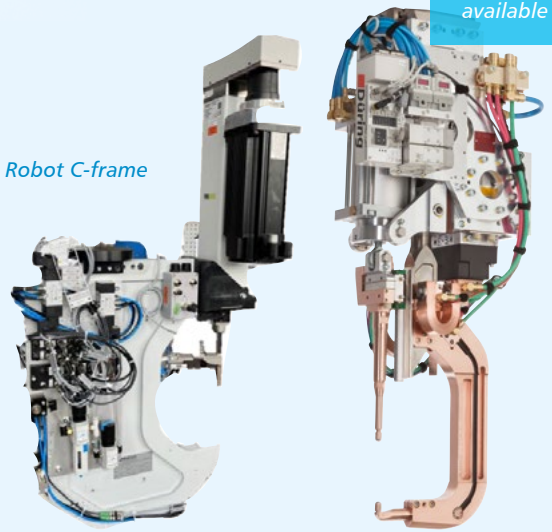

Robot C-frame

Laboratory Fastening Systems – The Partner for your REW Application

Training

Supporting you in gaining skills on the joining technology application. Topics include knowledge of the elements and systems along with joining parameterization and quality assurance.



Equipment

All REW joining trials are performed with state-of-the art automotive body-in-white manufacturing tooling and systems.
There are various options for press-fitting (robot C-frame, hand tool etc.), to reproduce your individual approaches. For welding a standard servo-driven c-frame gun is applied.



Joining spot accessibility and fixture design

Testing methods

Sample testing and the creation of prototypes support your benchmarking and qualification phase. Testing methods include joining spot analysis and parameter determination up to small batch prototype production (engineering, fixture design, pre-build production and quality check).

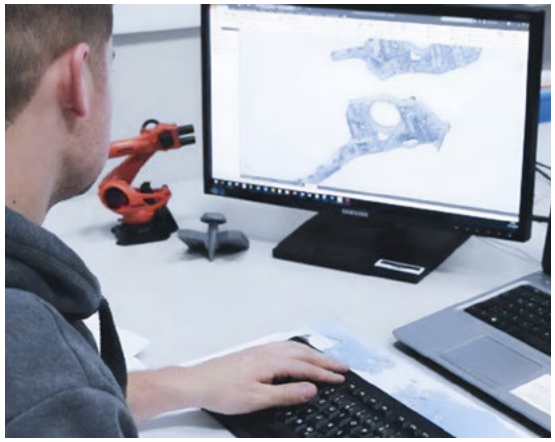

New developments

Development of REW fasteners and adaption of system technology to meet customer's individual requirements for new and future applications.



ARNOLD®
BlueFastening Systems

The ARNOLD GROUP

www.arnold-fastening.com

Wherever customers need us.

ARNOLD – this name is internationally renowned for efficient and sustainable fastening systems at the highest level.

With a foundation of many years of expertise in the production of intelligent fastening systems and very complex extruded parts, the ARNOLD GROUP has developed over a number of years into a comprehensive supplier and development partner for complex fastening systems. With our positioning of "BlueFastening Systems", this development process will continue under a united and harmonised structure. Engineering, services, fasteners and functional parts, together with feeding and processing systems, all from a single source – efficient, sustainable and international.

ARNOLD UMFORMTECHNIK GmbH & Co. KG
Carl-Arnold-Straße 25
74670 Forchtenberg-Ernsbach
Germany
T +49 7947 821-0
F +49 7947 821-111

ARNOLD UMFORMTECHNIK GmbH & Co. KG
Im Weitblick 1
74670 Forchtenberg-Rauhbusch
Germany
T +49 7947 821-0
F +49 7947 821-111

ARNOLD UMFORMTECHNIK GmbH & Co. KG
Max-Planck-Straße 19
74677 Dörzbach
Germany
T +49 7947 821-0
F +49 7947 821-111

ARNOLD UMFORMTECHNIK GmbH & Co. KG
Logistics center
Dörzbach plant
Germany
T +49 7947 821-0
F +49 7947 821-111

ARNOLD FASTENING SYSTEMS Inc.
1873 Rochester Industrial Ct.
Rochester Hills, MI 48309-3336
USA
T +1 248 997-2000
F +1 248 475-9470

ARNOLD FASTENERS (SHENYANG) Co., Ltd.
No. 119-2 Jianshe Road
110122 Shenyang
China
T +86 2488 90633
F +86 2488 90999

ARNOLD TECHNIQUE FRANCE SAS
267 Route Nationale 7
38150 Salaise sur Sanne
France
T +33 (0)427 698177
F +33 (0)427 698178











Technical changes reserved · Any reprinting, including extracts, requires permission.
AUM · Hela · ARN_202 6_031 03/26 © by ARNOLD UMFORMTECHNIK GmbH & Co. KG